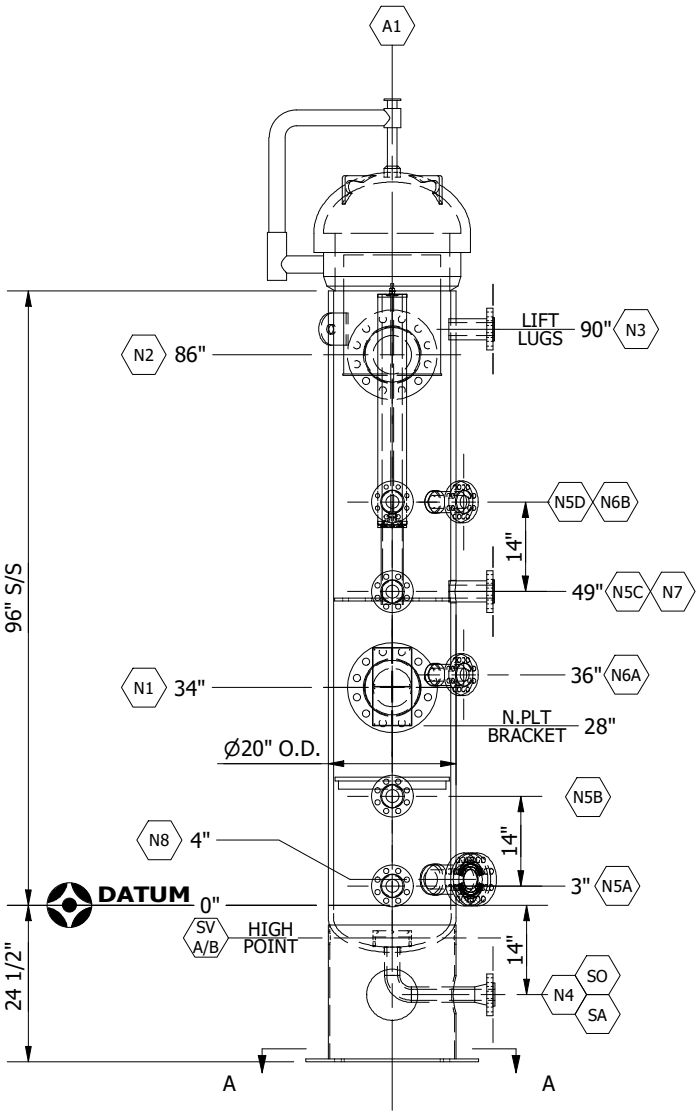

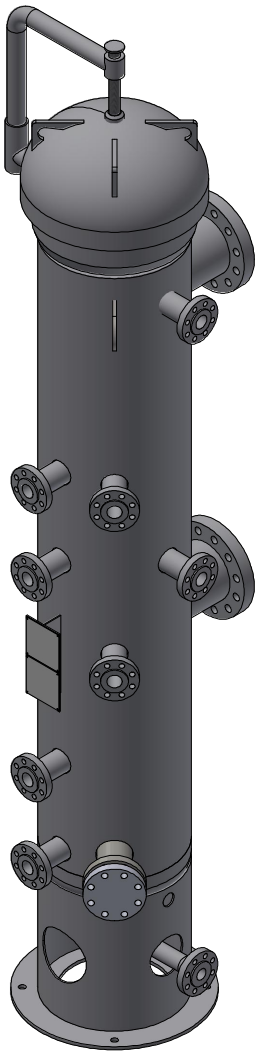

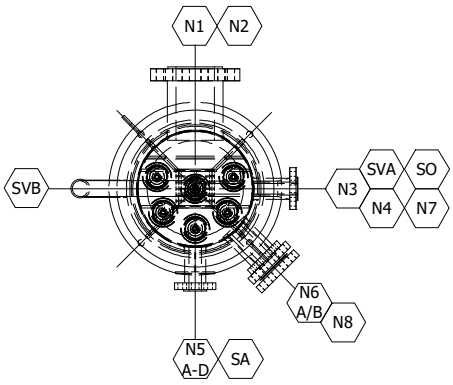

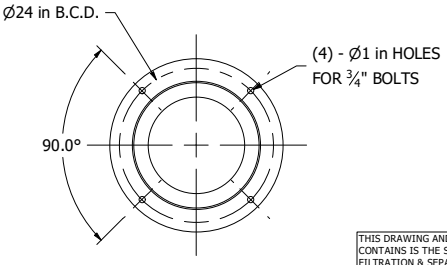

SECTION A-A

DESIGN DATA		
REGISTRATION	CRN: AB/BC/SK	NATIONAL BOARD: YES
DP (MAWP)	1440 psig @ 130 °F	
PWHT	YES	
RADIOGRAPHY	RT2	
UT	NONE	
CORR. ALLOW.	0.125"	
MDMT	-49 °F	

SCHEDULE OF OPENINGS

TAG	QTY	NPS	CLASS	TYPE	SERVICE
SVA/B	2	-	-	Ø2 HOLE	SKIRT VENT
SO	1	-	-	Ø6 HOLE	SKIRT OPEN.
SA	1	-	-	Ø8 HOLE	SKIRT ACC.
A1	1	20	600	CLOSURE	ACCESS
N8	1	3	600	RFLWN/BL.	HANDHOLE
N7	1	2	600	PIPE/RFWN	LIQUID OUT
N6A/B	2	2	600	PIPE/RFWN	DPI
N5A-D	4	2	600	PIPE/RFWN	LC
N4	1	2	600	PIPE/RFWN	DRAIN
N3	1	2	600	PIPE/RFWN	VENT
N2	1	6	600	RFLWN	OUTLET
N1	1	6	600	RFLWN	INLET
REPLACEMENT ELEMENTS			JPMG-336-CE-R (x6)		
SURFACE FINISH			1 s/c CLOVERDALE 74 SERIES, 2592 SAFETY BLUE, 2-3mils DFT		

NOTE THAT ALL DETAILS ARE APPROXIMATE AND NOT SUITABLE FOR PIPING OR FIT-UP PURPOSES. AT TIME OF ORDER, ISSUED FOR CONSTRUCTION DRAWINGS WILL BE PROVIDED TO VERIFY DETAILS FOR PIPING AND FIT-UP.

THIS DRAWING AND ALL THE INFORMATION IT CONTAINS IS THE SOLE PROPERTY OF JCI FILTRATION & SEPARATION INC. IT HAS NOT BEEN PUBLISHED AND IS CONFIDENTIAL. THE DRAWING HAS BEEN LENT TO THE BORROWER FOR THEIR CONFIDENTIAL USE ONLY. IN CONSIDERATION OF THE LENDING OF THIS DRAWING, THE BORROWER PROMISES AND AGREES TO RETURN IT UPON REQUEST. IT IS NOT TO BE REPRODUCED, COPIED, LENT, OR OTHERWISE DISPOSED OF DIRECTLY OR INDIRECTLY, NOR USED IN ANY WAY DETRIMENTAL TO THE INTERESTS OF JCI FILTRATION & SEPARATION INC. JCI AND THE JCI LOGO ARE TRADEMARKS OF JCI HOLDINGS LTD., USED UNDER LICENSE BY JCI FILTRATION & SEPARATION INC.

JCI Filtration & Separation Inc.
2929 15th ST NE - Calgary, AB T2E 7L8
T:(403) 313-1559 F:(403) 280-7926

High Pressure Coalescing Filter - 20" O.D. x 96" S/S
JCI Model JVCS-6-20-1440-6-336-FLG

DWG CREATION DATE:	DWG NR:	REV:
2023-05-02	JVCS-6-20-1440-6-336-FLG REV 1.idw	1